X10 (EA/SA/INTA)

Technical documentation

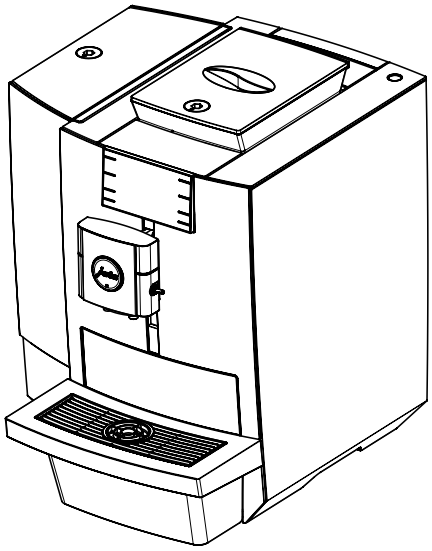

Supplied as standard

- Automatic speciality coffee machine
- Milk system cleaner (mini tabs)
- Container for milk system cleaning
- CLARIS Pro Smart+ filter cartridge
- Welcome Pack:
  - Instructions for use
  - Cleaning tablets
  - Silicone hose and connector
  - Spanner for aroma preservation cover, water tank cover and grinder adjustment wheel

Requirements for installation location

- Horizontal surface that is not sensitive to water
- Ambient conditions:
  - Air humidity max. 80%
  - Ambient temperature 10–35°C

ℹ The required connections at the customer's premises must be carried out by an approved **qualified person** before the JURA service technician can set up the machine at your chosen location.

ℹ Please make sure that the building connections are as close as possible to the location of the machine (refer to length of connection pipes).

Always note the information in the instructions for use for your coffee machine (Chapter 3 "Preparing and using for the first time" – "Requirements for first-time use" / "Setting up the machine").

Dimensions

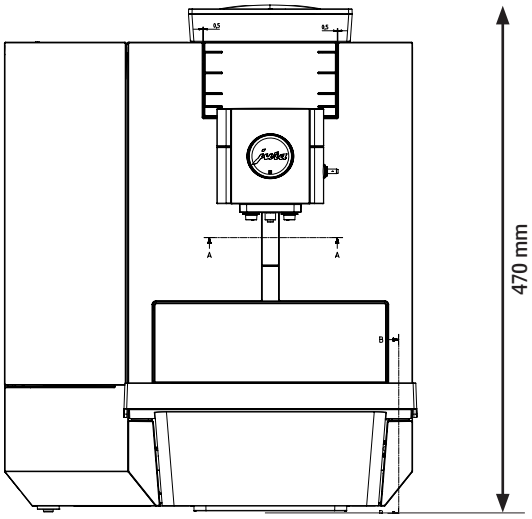

Outline

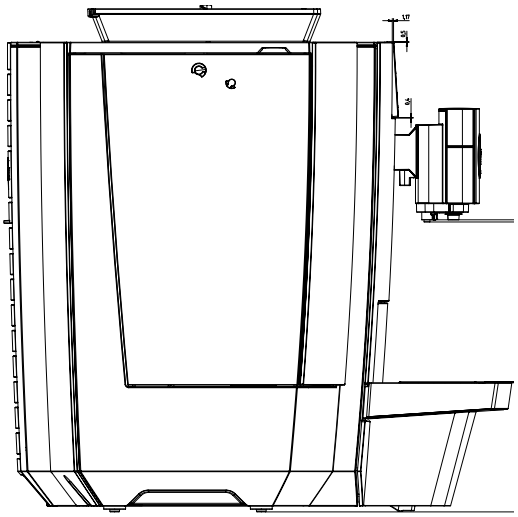

Side outline
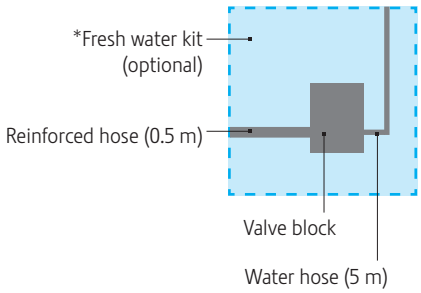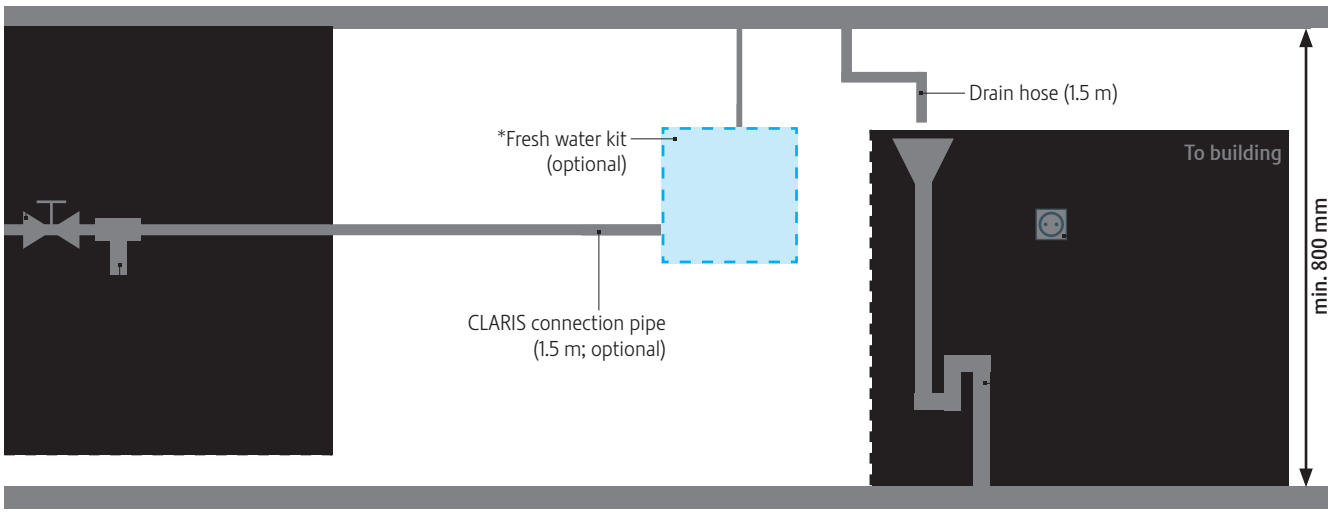
General space needed